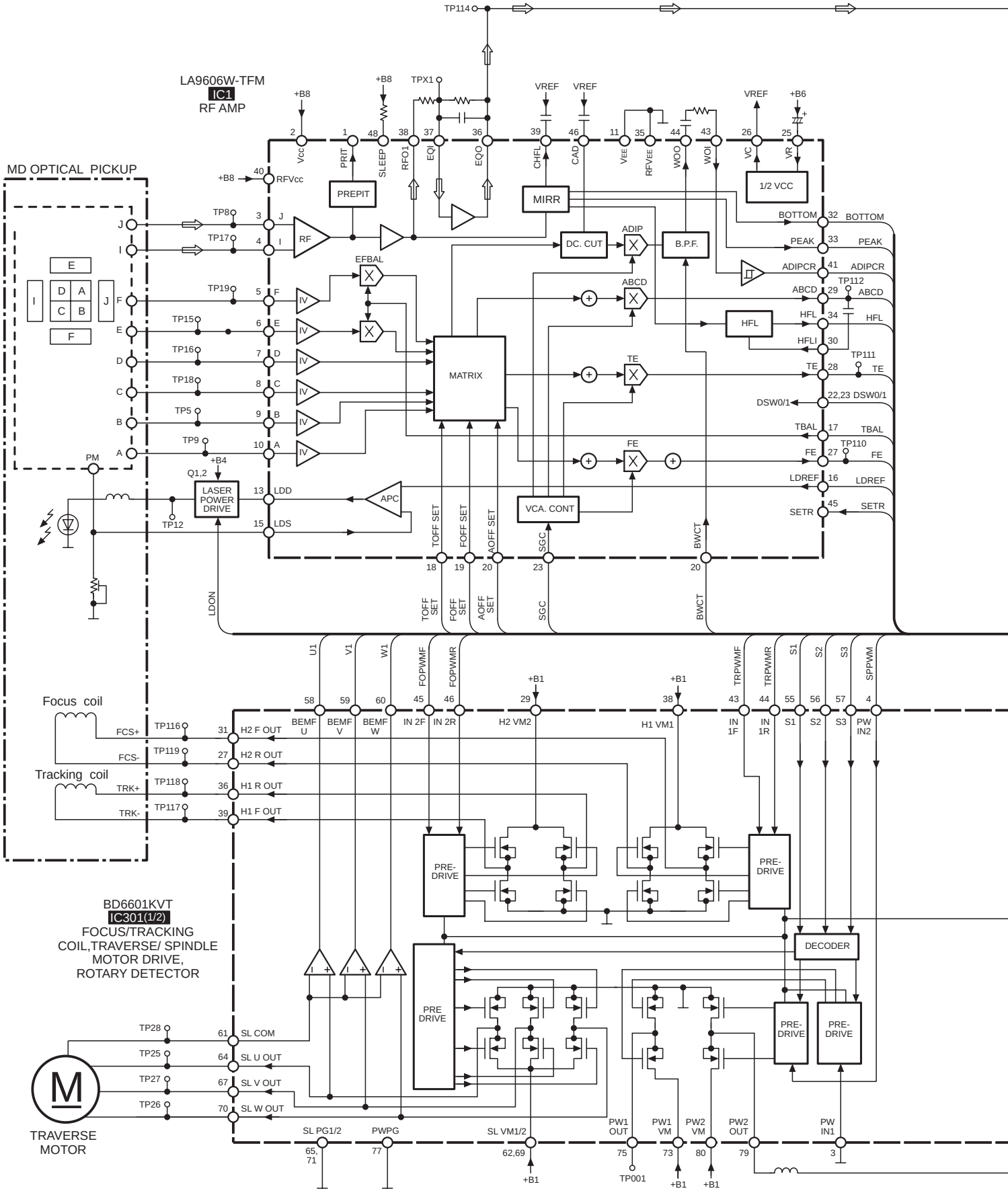
LA9606W-TFM
IC1
RF AMP
MD OPTICAL PICKUP
MATRIX
RF
PREPIT
MIRR
DC. CUT
B.P.F.
HFL
1/2 VCC
VCA. CONT
APC
LASER POWER DRIVE
Focus coil
Tracking coil
BD6601KVT
IC301(1/2)
FOCUS/TRACKING COIL,TRAVERSE/ SPINDLE MOTOR DRIVE, ROTARY DETECTOR
PRE-DRIVE
PRE DRIVE
DECODER
TRAVERSE MOTOR

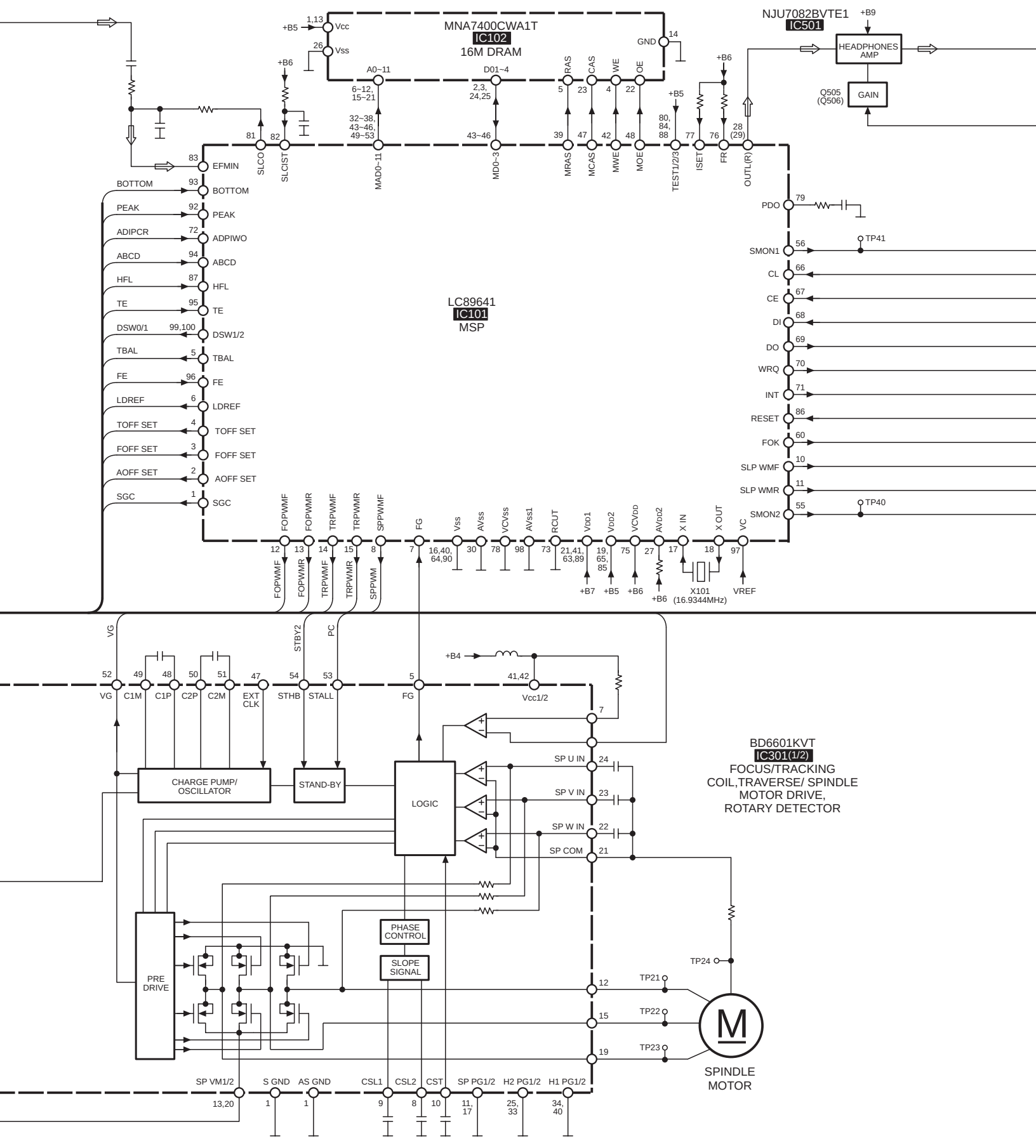
MNA7400CWA1T
IC102
16M DRAM
NJU7082BVTE1
IC501
HEADPHONES AMP
GAIN
Q505 (Q506)
LC89641
IC101
MSP
BD6601KVT
IC301(1/2)
FOCUS/TRACKING COIL,TRAVERSE/ SPINDLE MOTOR DRIVE, ROTARY DETECTOR
CHARGE PUMP/ OSCILLATOR
STAND-BY
LOGIC
PHASE CONTROL
SLOPE SIGNAL
PRE DRIVE
SPINDLE MOTOR
X101 (16.9344MHz)
TP40
TP41
TP21
TP22
TP23
TP24

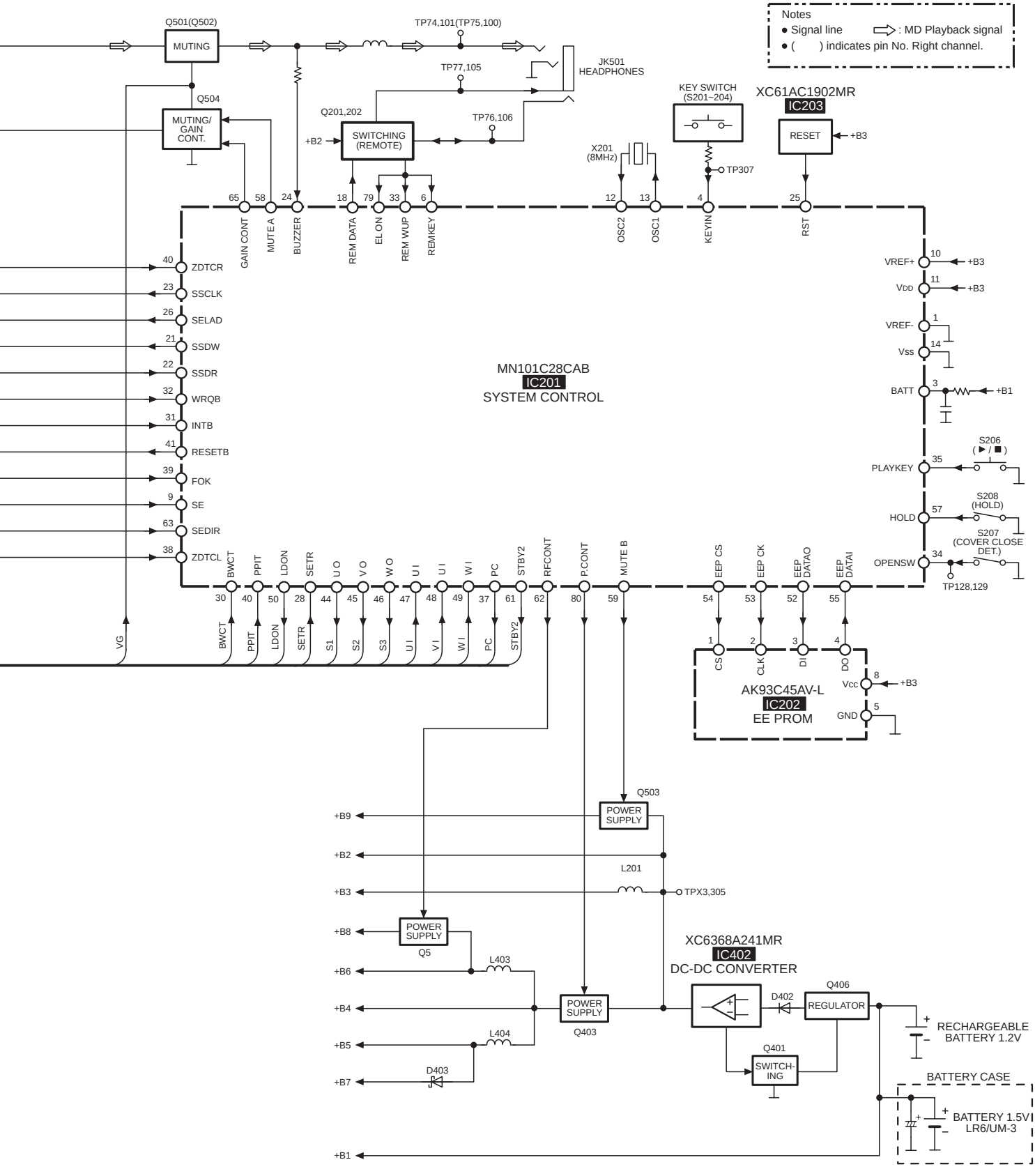
Notes
● Signal line
: MD Playback signal
● ( ) indicates pin No. Right channel.
Q501(Q502)
MUTING
TP74,101(TP75,100)
TP77,105
JK501
HEADPHONES
Q504
MUTING/
GAIN
CONT.
Q201,202
SWITCHING
(REMOTE)
+B2
TP76,106
KEY SWITCH
(S201~204)
XC61AC1902MR
IC203
RESET
+B3
X201
(8MHz)
TP307
65
58
24
18
79
33
6
12
13
4
25
GAIN CONT
MUTE A
BUZZER
REM DATA
EL ON
REM WUP
REMKEY
OSC2
OSC1
KEYIN
RST
40
ZDTCR
23
SSCLK
26
SELAD
21
SSDW
22
SSDR
32
WRQB
31
INTB
41
RESETB
39
FOK
9
SE
63
SEDIR
38
ZDTCL
MN101C28CAB
IC201
SYSTEM CONTROL
10
VREF+
+B3
11
VDD
+B3
1
VREF-
14
Vss
3
BATT
+B1
S206
(▶ / ■)
35
PLAYKEY
S208
(HOLD)
57
HOLD
S207
(COVER CLOSE
DET.)
34
OPENSW
TP128,129
BWCT
PPIT
LDON
SETR
U O
V O
W O
U I
U I
W I
PC
STBY2
RFCONT
P.CONT
MUTE B
EEP CS
EEP CK
EEP
DATAO
EEP
DATAI
30
40
50
28
44
45
46
47
48
49
37
61
62
80
59
54
53
52
55
VG
BWCT
PPIT
LDON
SETR
S1
S2
S3
U I
V I
W I
PC
STBY2
1
2
3
4
CS
CLK
DI
DO
8
Vcc
+B3
5
GND
AK93C45AV-L
IC202
EE PROM
Q503
POWER
SUPPLY
+B9
+B2
L201
+B3
TPX3,305
+B8
POWER
SUPPLY
Q5
L403
+B6
XC6368A241MR
IC402
DC-DC CONVERTER
+B4
POWER
SUPPLY
Q403
D402
Q406
REGULATOR
+B5
L404
Q401
SWITCH-
ING
RECHARGEABLE
BATTERY 1.2V
+B7
D403
BATTERY CASE
BATTERY 1.5V
LR6/UM-3
+B1